No.	Plan	Article	Qty
1	P00077263 DP	2695104	1
2	P00077587	GP30926	1
3	P00077664	2695226	1
4	P00077807	2695326	1
|5	P00079125	GP30300	2
6	BALL JOINT R	1922805	1
7	BALL JOINT L	1922806	1
8	M6x16	1008459	2
9	WASHER M8\	1001570	2
10	NUT M8	1001671	1
11	NUT M8	1001682	2
12	WASHER M6	1004414	2
13	1993362	1993362	2
14	1997328	1997328	2
15	BEARING	3991619	4
16	NUR M8	3992037	1

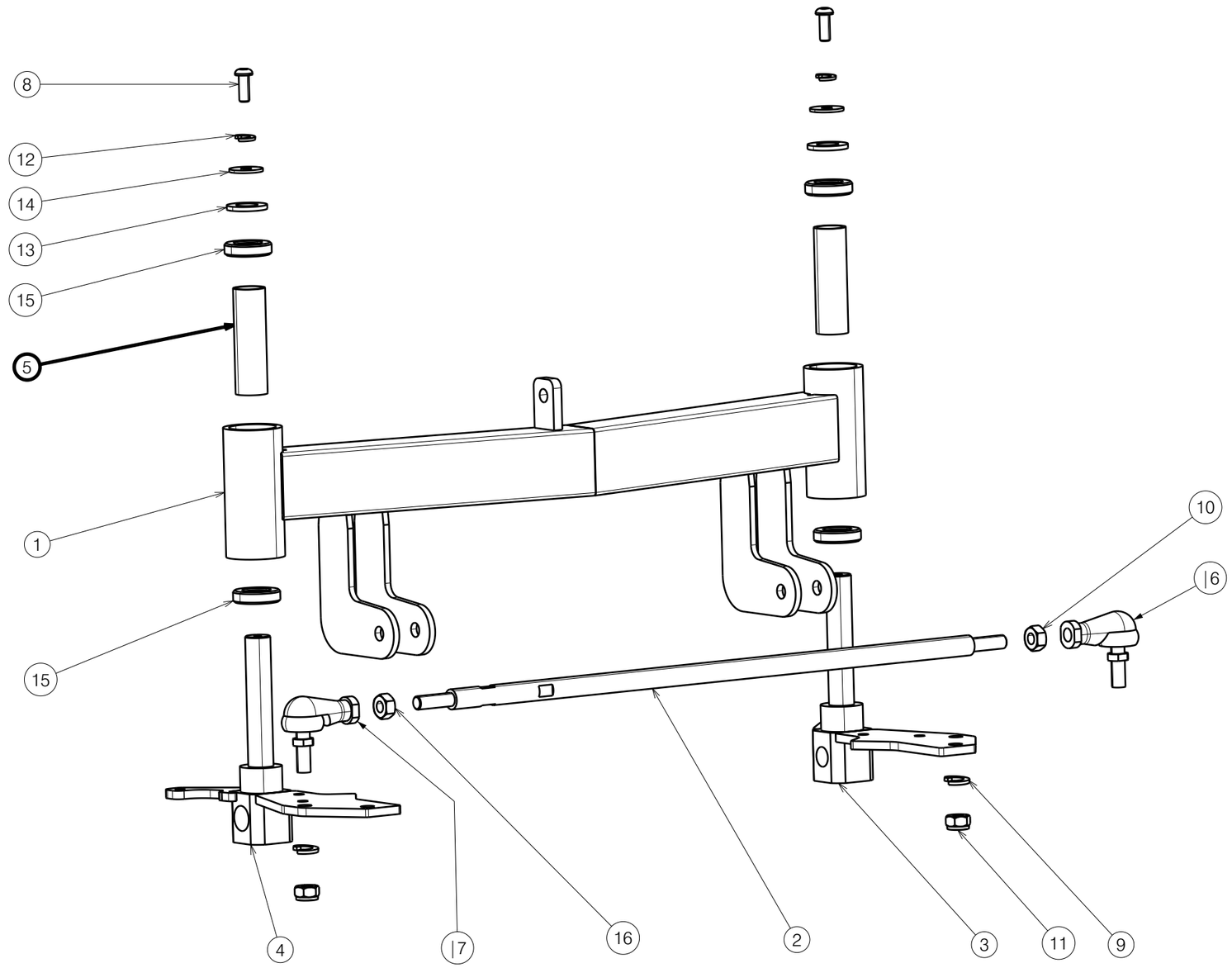

NOTICE: THE INFORMATION CONTAINED ON THIS DRAWING IS PROPRIETARY TO VERMEIREN GROUP AND SHALL NOT BE DISCLOSED IN WHOLE OR IN PART, OR USED FOR ANY DESIGN OR MANUFACTURE, EXCEPT WHEN SUCH USER POSSESSES DIRECT WRITTEN AUTHORISATION FROM VERMEIREN GROUP

SV KUARZ SUPPORT FRONT WHEEL SUB ASSY

Plan No.

E00075740/G.1

Scale: 1:3	Drafted	Verified	Confirmed
Date	10/12/2024	10/08/2026	10/08/2026
Initials	BK	PM	MK

VERMEIREN