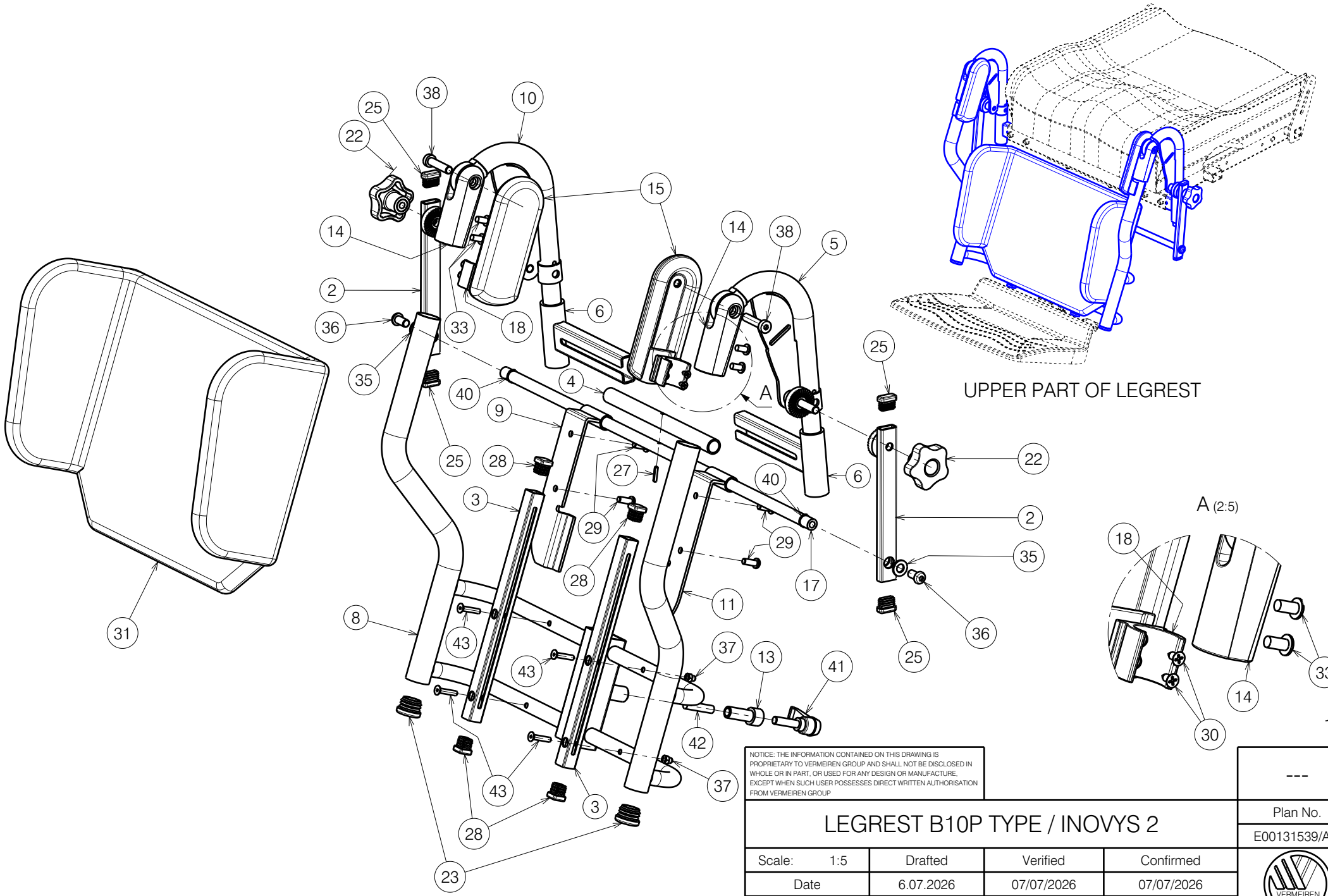

1/2

NOTICE: THE INFORMATION CONTAINED ON THIS DRAWING IS PROPRIETARY TO VERMEIREN GROUP AND SHALL NOT BE DISCLOSED IN WHOLE OR IN PART, OR USED FOR ANY DESIGN OR MANUFACTURE, EXCEPT WHEN SUCH USER POSSESSES DIRECT WRITTEN AUTHORISATION FROM VERMEIREN GROUP

LEGREST B10P TYPE / INOVYS 2

Plan No. E00131539/A.1

Scale: 1:5	Drafted	Verified	Confirmed
Date	6.07.2026	07/07/2026	07/07/2026
Initials	AZ	AZ	AS

No.	Plan	Article	Qty
1	P00130536	2929300	1
2	P00131175	2929554	2
3	P00131179	2929400	2
4	Y007782	1608154	1
5	Y013006	1689654	1
6	Y013026	1665554	2
7	Y013065	1678300	1
8	Y012100 (40) Y014152 (45) Y014735 (50)	1665254 1710254 1710354	1 1 1
9	Y014413	1708500	1
10	Y014503	1704954	1
11	Y014580	1708400	1
12	X001016	1001682	4
13	X003478	1998374	1
14	X003492	1900607	2
15	X003793	1900442	2
16	X004034	1683600	4
17	X003729 (40) X004375 (45) X004376 (50)	1638400 1709600 1710500	1 1 1
18	XP00106	2990072	2
19	XP00144	1894000	1
20	XP00567	1894100	1
21	XP03292	2996996	1
22	Head Nut M8	1001581	2
23	Cap ϕ25	1001608	2
24	Cap 40x20	1001615	1
25	Cap 20x10	1001621	4
26	M8 DIN125	1003199	2
27	Spring Pin DIN1481 ϕ3x16	1003791	1
28	Cap 15x15	1005899	4
29	M6x16 ISO7380	1008459	4
30	3,9x9,5 DIN7982	1901212	4
31	Cushion (40) Cushion (45) Cushion (50)	1919069 1919070 1919071	1 1 1
32	Cap ϕ22	1990648	2
33	Rivet ϕ6	1992835	8
34	M8x35 ISO7380	1993236	2
35	M8 DIN126 (Black)	1996214	2
36	M8x16 ISO7380 (Black)	2994427	2
37	M5 DIN986 (Black)	2994902	4
38	M8x35 DIN7984 (Black)	2999453	2
39	M8x40 ISO7380	1008739	2
40	Ring DIN471 12-1mm	1008090	2
41	Lever M8x30	1005860	1
42	Round Steel ϕ8x35	1401000	1
43	M5x25 DIN7991 (Black)	2994071	4

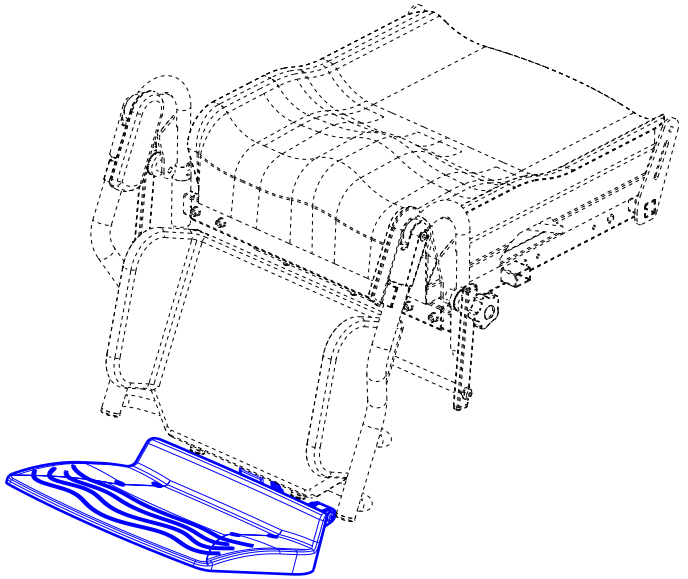

LOWER PART OF LEGREST

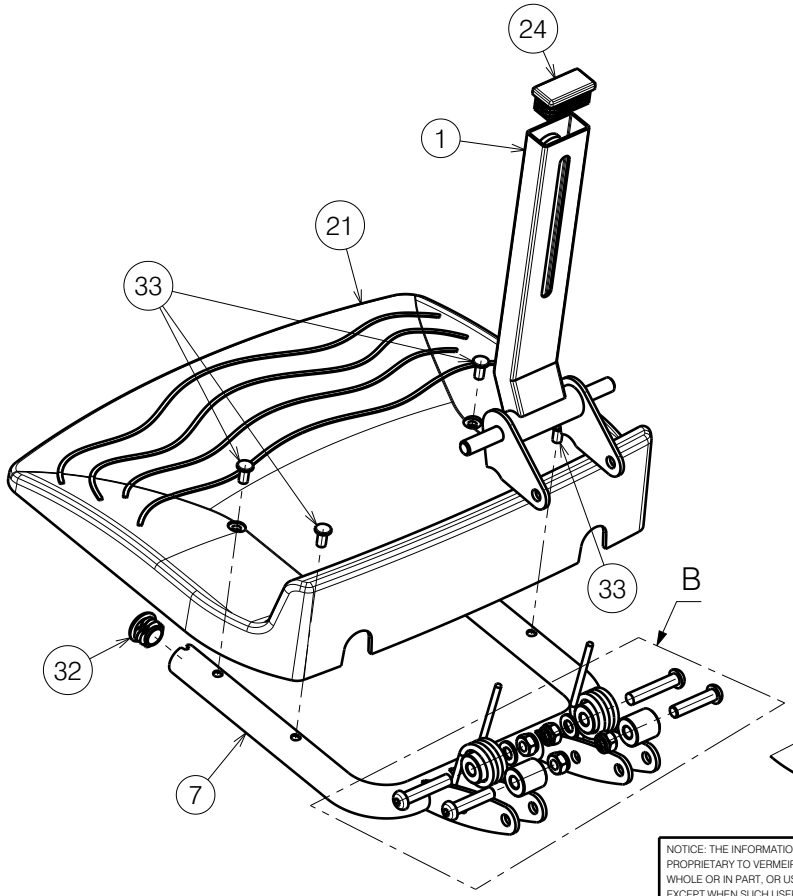

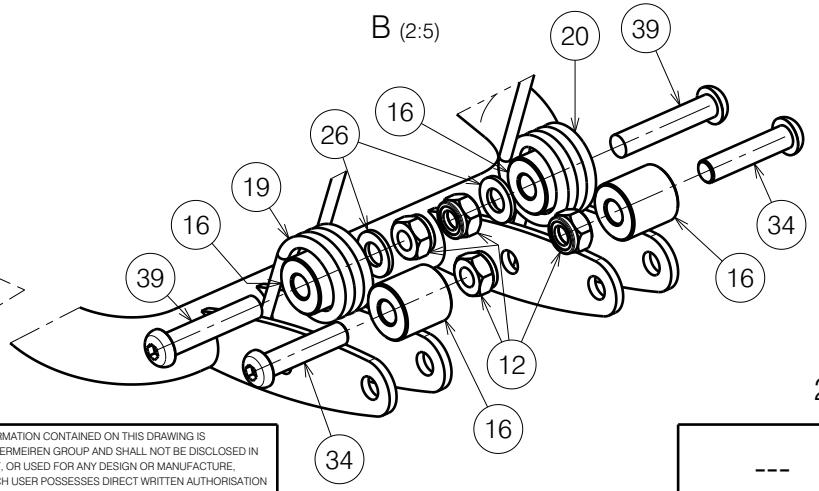

2/2

NOTICE: THE INFORMATION CONTAINED ON THIS DRAWING IS PROPRIETARY TO VERMEIREN GROUP AND SHALL NOT BE DISCLOSED IN WHOLE OR IN PART, OR USED FOR ANY DESIGN OR MANUFACTURE, EXCEPT WHEN SUCH USER POSSESSES DIRECT WRITTEN AUTHORISATION FROM VERMEIREN GROUP

LEGREST B10P TYPE / INOVYS 2

Plan No.
E00131539/A.1

Scale: 1:5	Drafted	Verified	Confirmed
Date	6.07.2026	07/07/2026	07/07/2026
Initials	AZ	AZ	AS

VERMEIREN