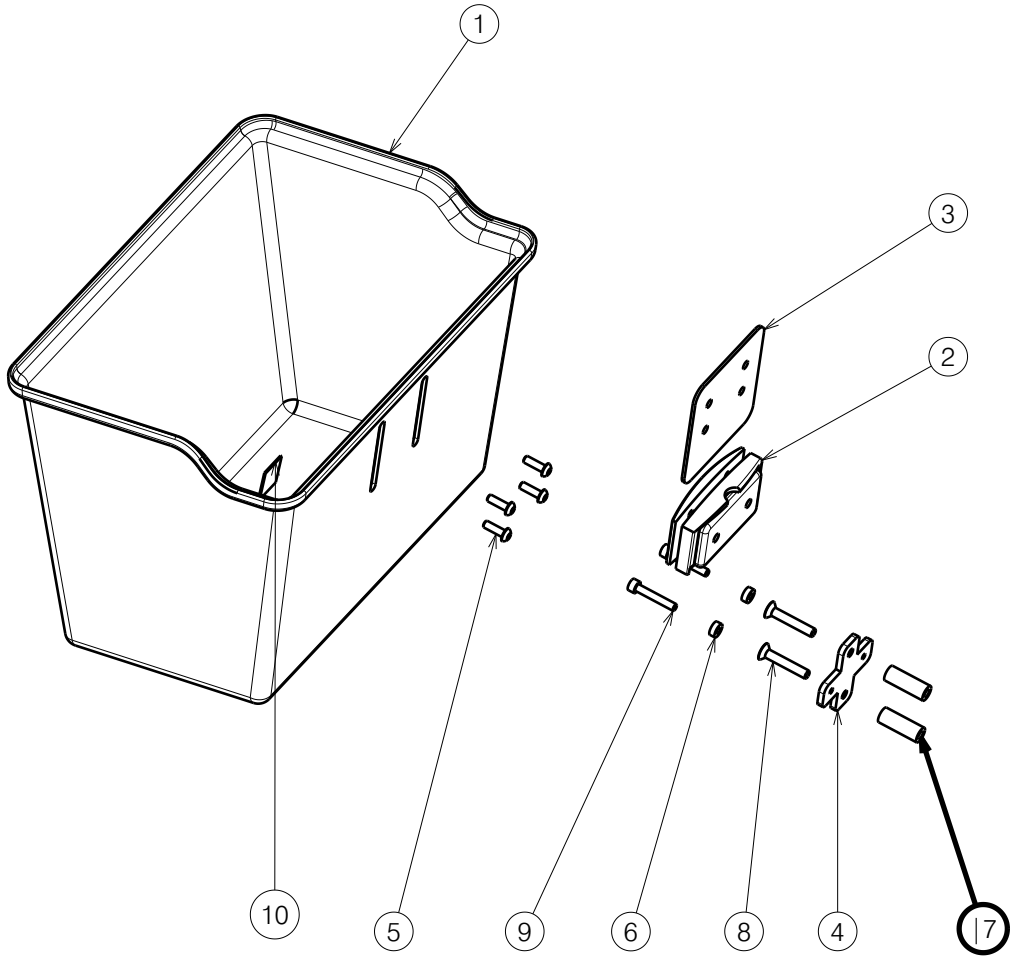

Bill of Material			
No.	Plan	Article	Quantity
1	Basket	3990644	1
2	3990791	3990791	1
3	YC00616	1C31904	1
4	YC00868	1C31804	1
5	M5x16 ISO7380	1006112	4
6	3992273	3992273	2
7	XC00177	1C34400	2
8	M6x35 DIN7991	2991297	2
9	M5x30 DIN912	1903983	2
10	P00049955	T001093	1
11*	Assembly Guide	W202729	1

*not depicted

NOTICE: THE INFORMATION CONTAINED ON THIS DRAWING IS PROPRIETARY TO VERMEIREN GROUP AND SHALL NOT BE DISCLOSED IN WHOLE OR IN PART, OR USED FOR ANY DESIGN OR MANUFACTURE, EXCEPT WHEN SUCH USER POSSESSES DIRECT WRITTEN AUTHORISATION FROM VERMEIREN GROUP

SV KUARZ FRONT BASKET

Plan No.
E00103963/D.1

Scale: 1:5	Drafted	Verified	Confirmed
Date	23/04/2025	10/08/2026	10/08/2026
Initials	BK	BK	MK