No.	Plan	Article	Qty
1	E00075727	-	1
2	E00075733	-	1
3	E00093211	-	1
4	E00084837	-	1
5	E00092631	-	1
6	A00093100	1921939	2
7	P00073586	29996...	2
8	P00078386	2697704	1
9	P00078387	2697604	1
|10	P00077255	2695626	1
11	P00077649	GP30826	1
12	P00083505	2696704	1
13	P00084217	2696604	2
14	P00084565	2697004	1
15	XC00908	3991836	2
16	Spring washer M8	1001570	6
17	Nut M8	1001671	1
18	Nut M8	1996213	8
20	Nut M6	3991110	18
21	Screw M6x16 black	2994067	10
22	Washer M6 black	2994414	-
23	1922805	1922805	1
24	3990781	3990781	1
25	Screw M8x25	1995598	2
26	1922806	1922806	1
27	3992314	3992314	1
28	Screw M8X95	3994492	4
29	XC00295	3990735	2
30	Washer M16	1001560	2
31	XC00198	3990729	2
32	Nut M14	3992772	2
33	Screw M6X20	2994010	8
35	Nut M8	3992037	1
36	Screw M8x30 Black	1993236	2

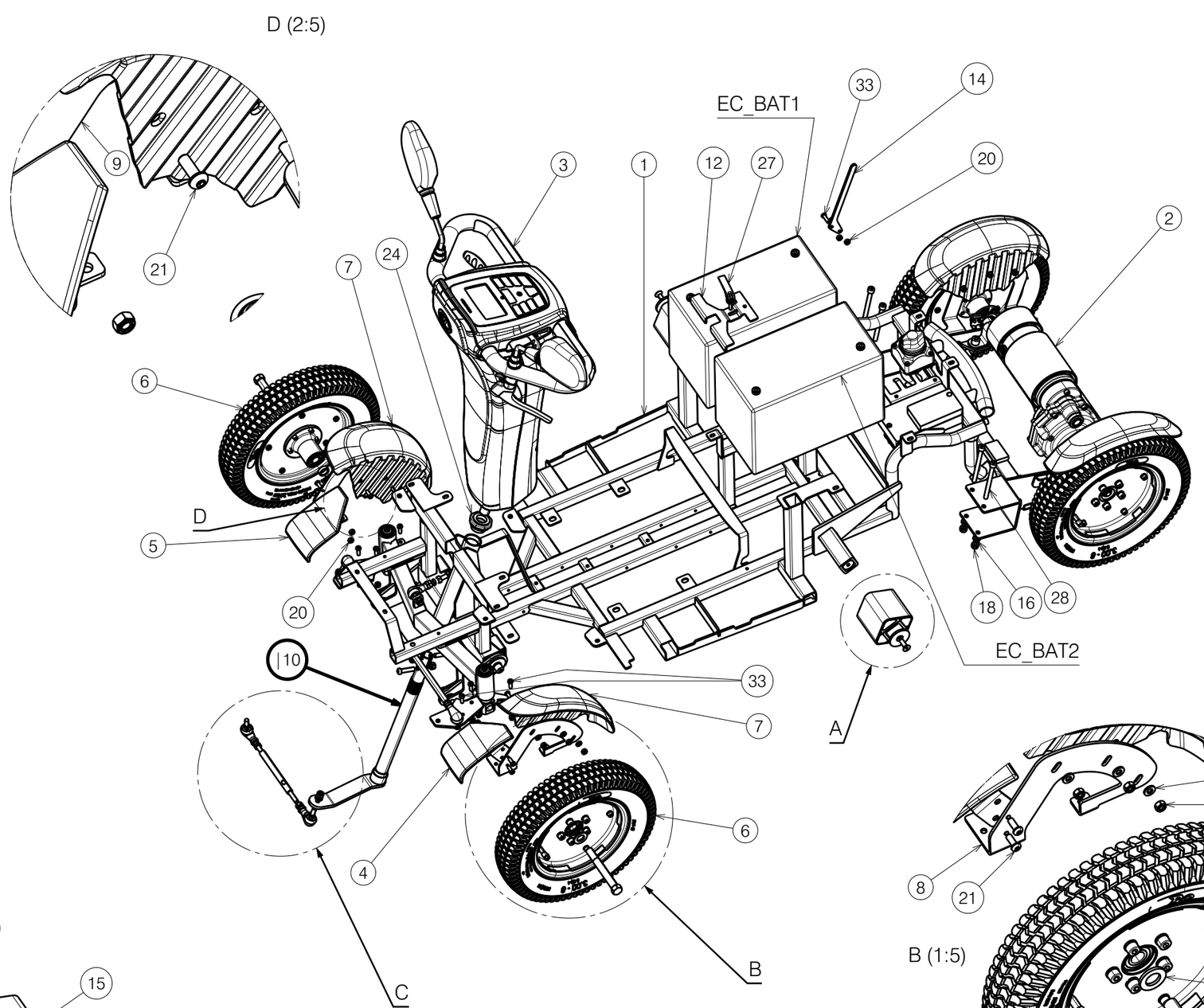

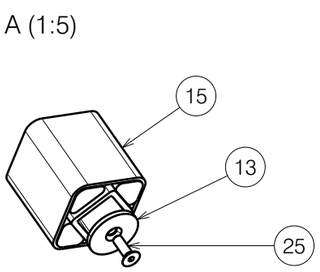

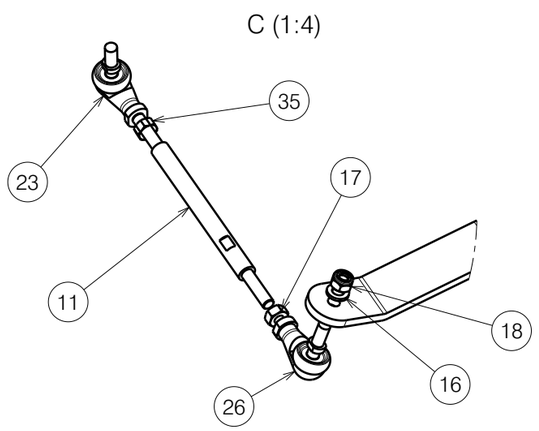

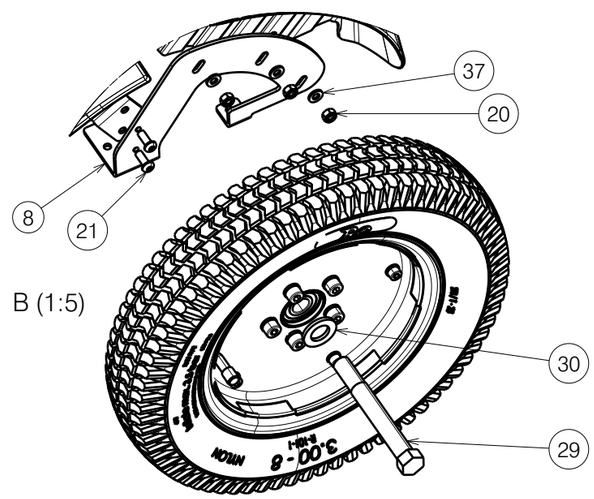

37	A00093390*	1921942	1
38	A00093389**	1921943	1
39	A00093396***	1921944	1
40	A00093393****	1921945	1

Optional Equipment:
* - Line Profile Tire Set Front Left
** - Line Profile Tire Front Right
*** - Line Profile Tire Rear Left
**** - Line Profile Tire Rear Right

NOTICE: THE INFORMATION CONTAINED ON THIS DRAWING IS PROPRIETARY TO VERMEIREN GROUP AND SHALL NOT BE DISCLOSED IN WHOLE OR IN PART, OR USED FOR ANY DESIGN OR MANUFACTURE, EXCEPT WHEN SUCH USER POSSESSES DIRECT WRITTEN AUTHORISATION FROM VERMEIREN GROUP

SV KUARZ ASSEMBLY FRAME WITH WHEELS

Plan No. E00075731/F.1

Scale: 1:10	Drafted	Verified	Confirmed
Date	05/12/2024	16/10/2026	16/10/2026
Initials	BK	PM	MK

VERMEIREN

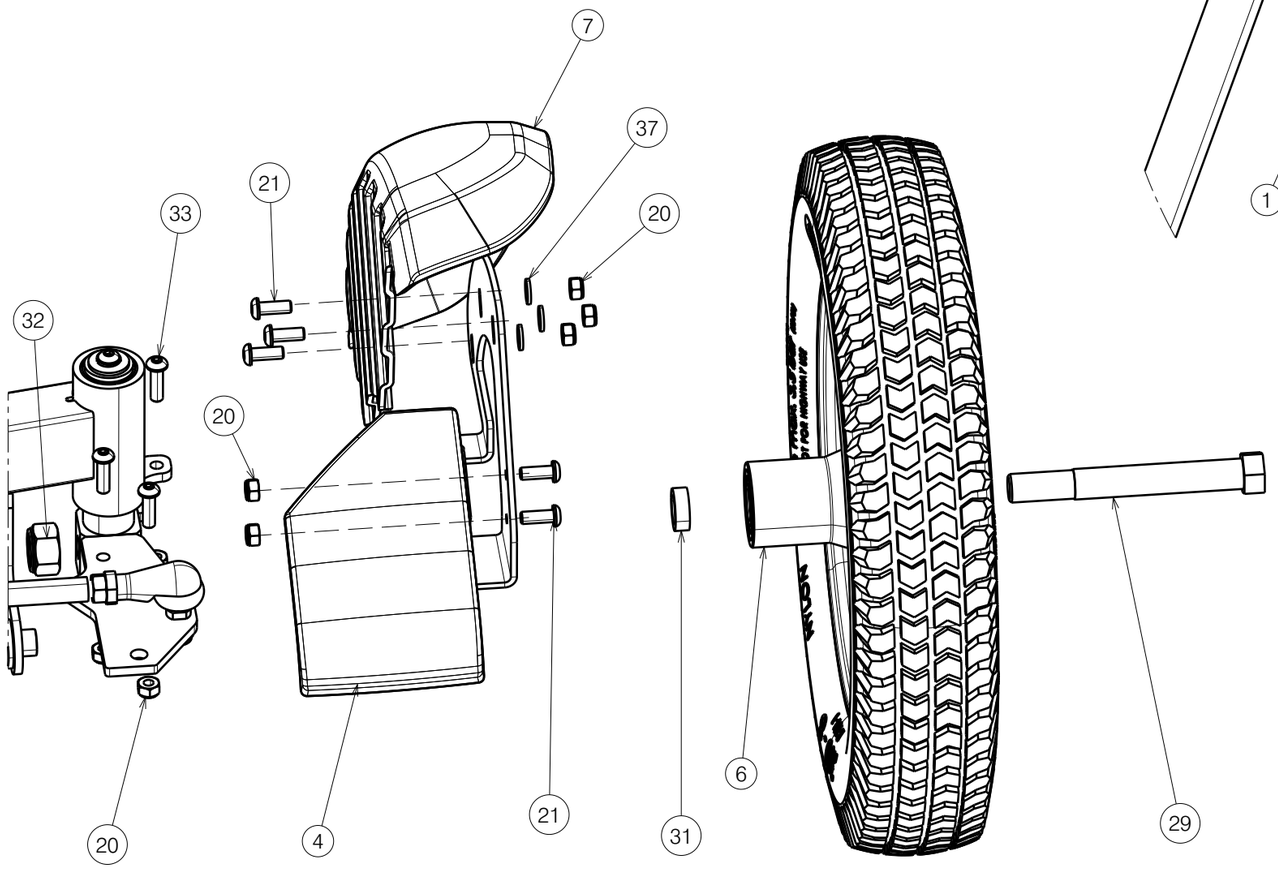

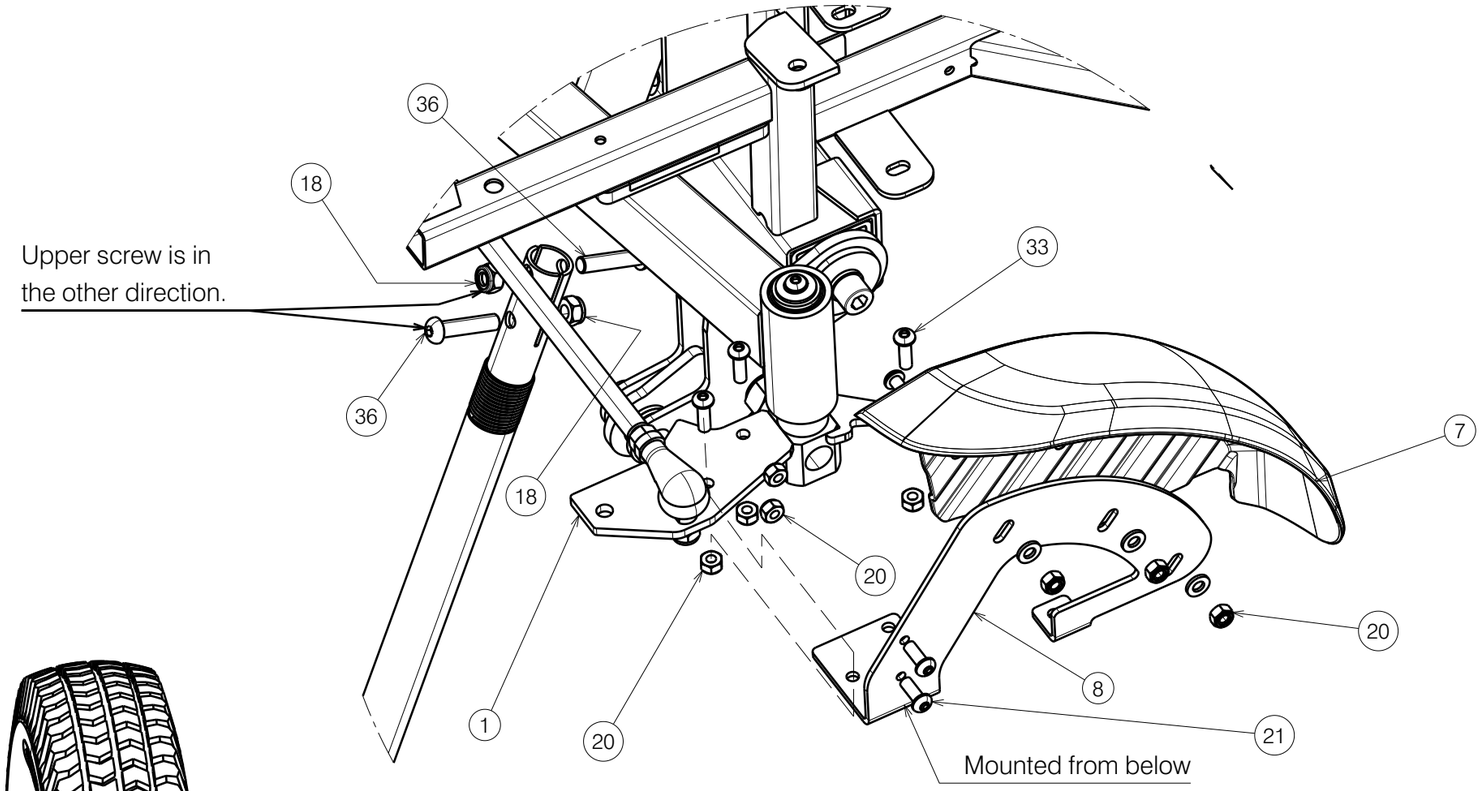

NOTICE: THE INFORMATION CONTAINED ON THIS DRAWING IS PROPRIETARY TO VERMEIREN GROUP AND SHALL NOT BE DISCLOSED IN WHOLE OR IN PART, OR USED FOR ANY DESIGN OR MANUFACTURE, EXCEPT WHEN SUCH USER POSSESSES DIRECT WRITTEN AUTHORISATION FROM VERMEIREN GROUP

Sheet 2/2

SV KUARZ ASSEMBLY FRAME WITH WHEELS

Plan No.

E00075731/F.1

Scale: 1:10	Drafted	Verified	Confirmed
Date	05/12/2024	16/10/2026	16/10/2026
Initials	BK	PM	MK

VERMEIREN