V300 / V300D

Quick Start Guide

CE	TYPE V300 / V300D	MD	Rev. 2026-10
≤ 130 kg	ISO 7176-19		
SHOP			

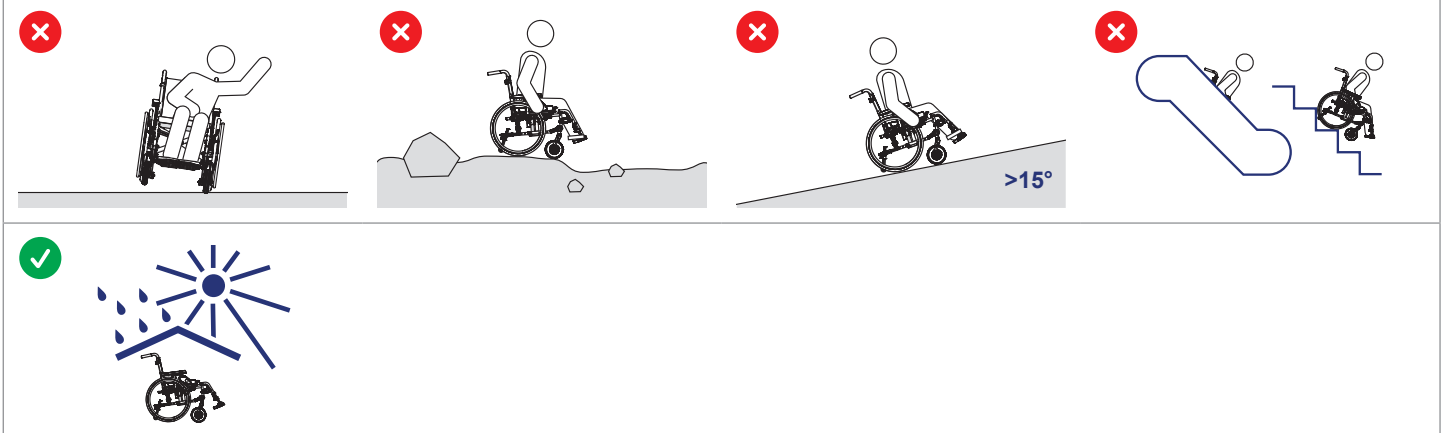

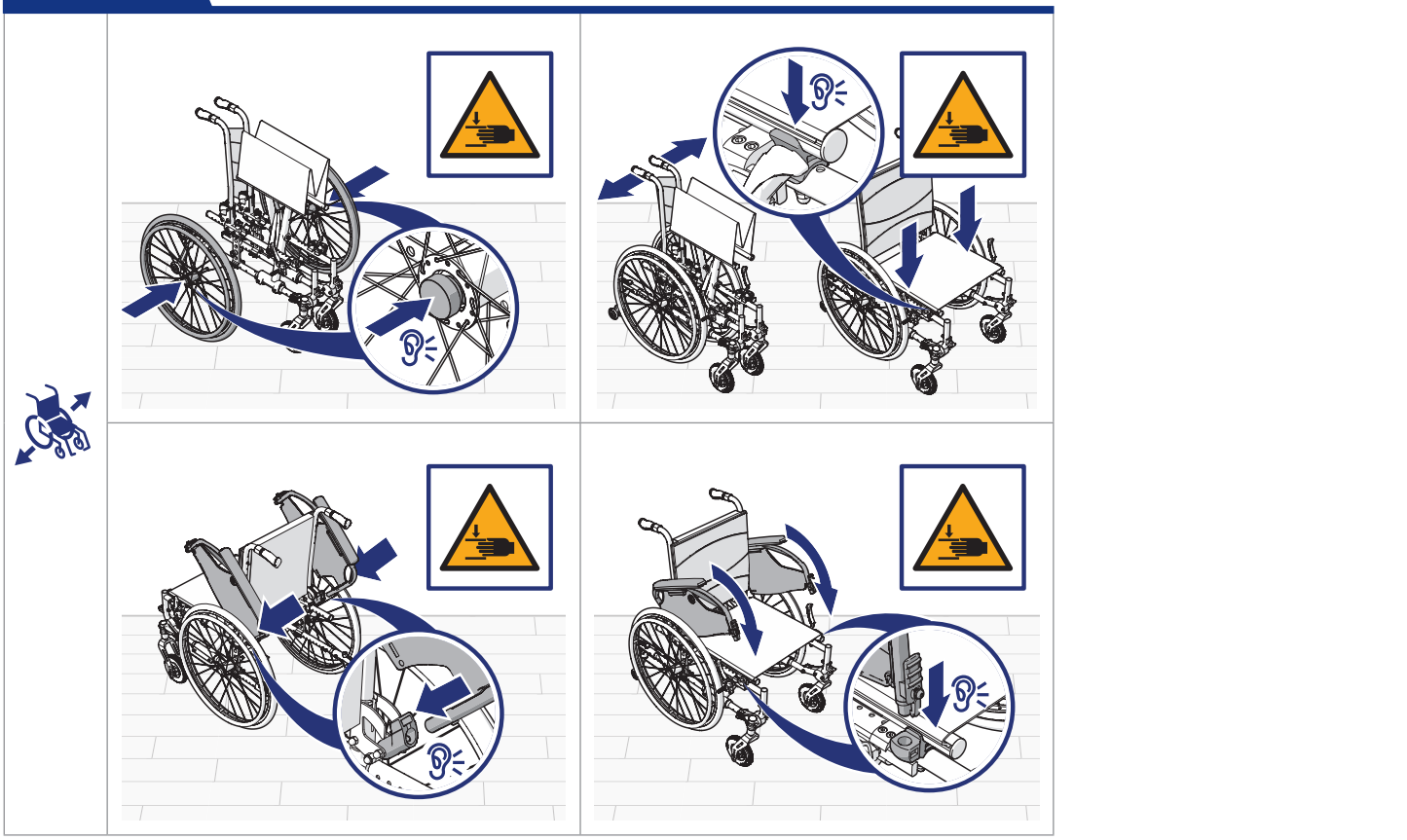

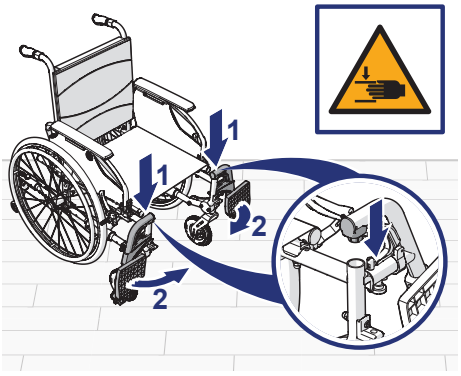
1
1
2
2

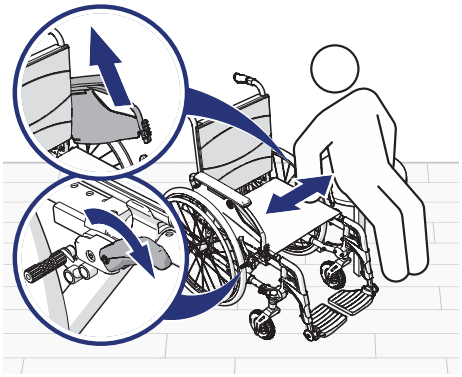

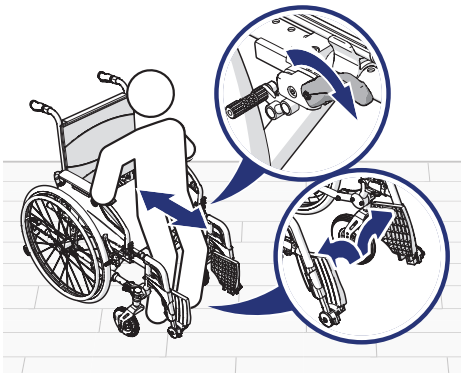



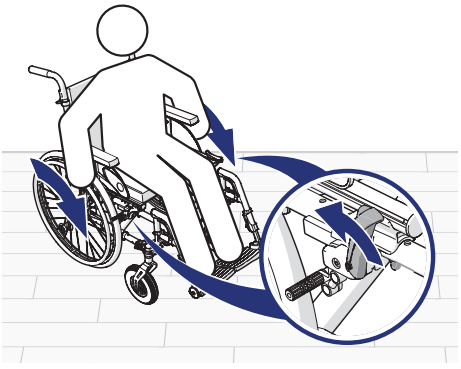

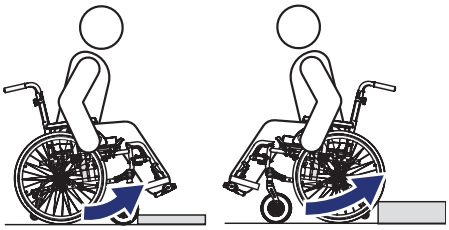

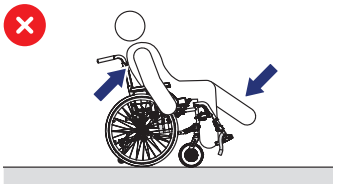

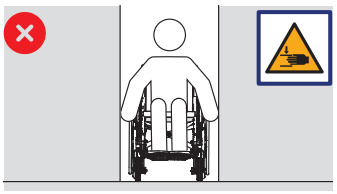

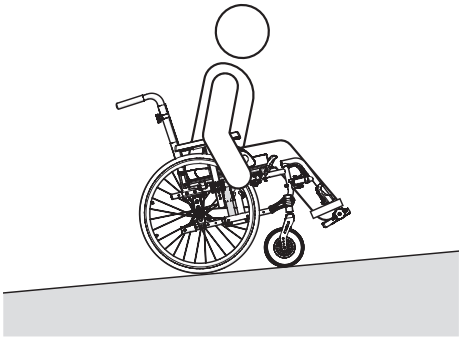



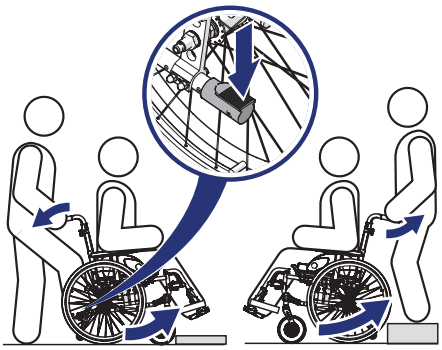

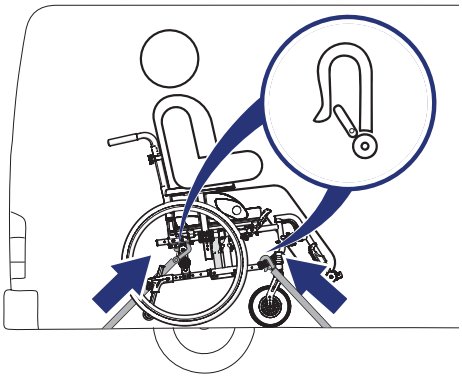

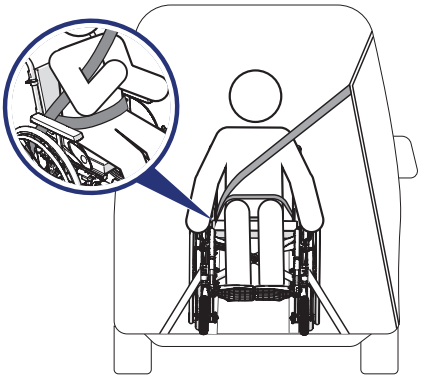

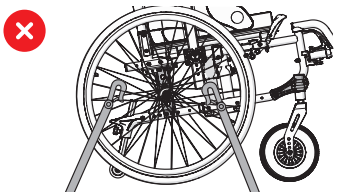

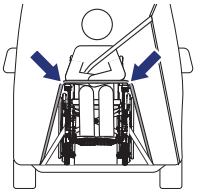

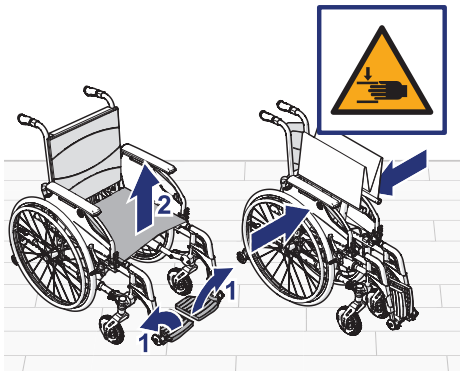
2
1
1

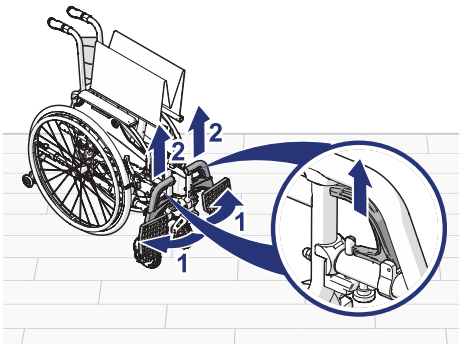
2
2
1
1

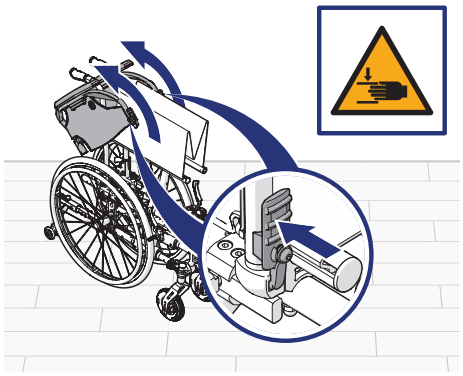

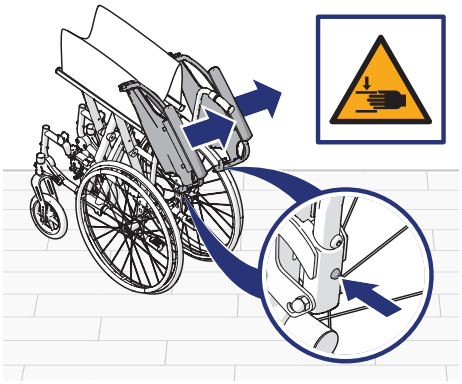

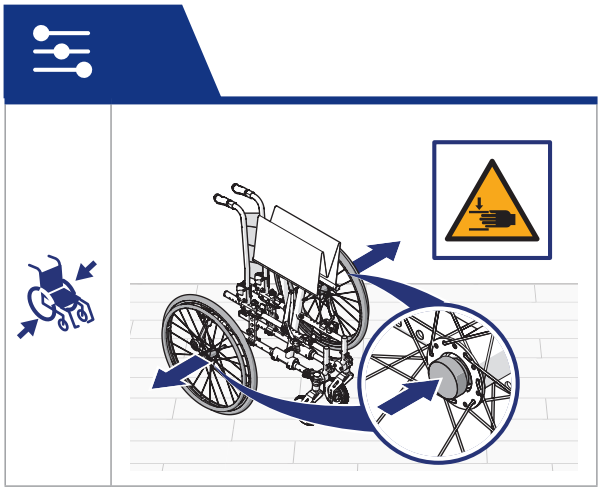

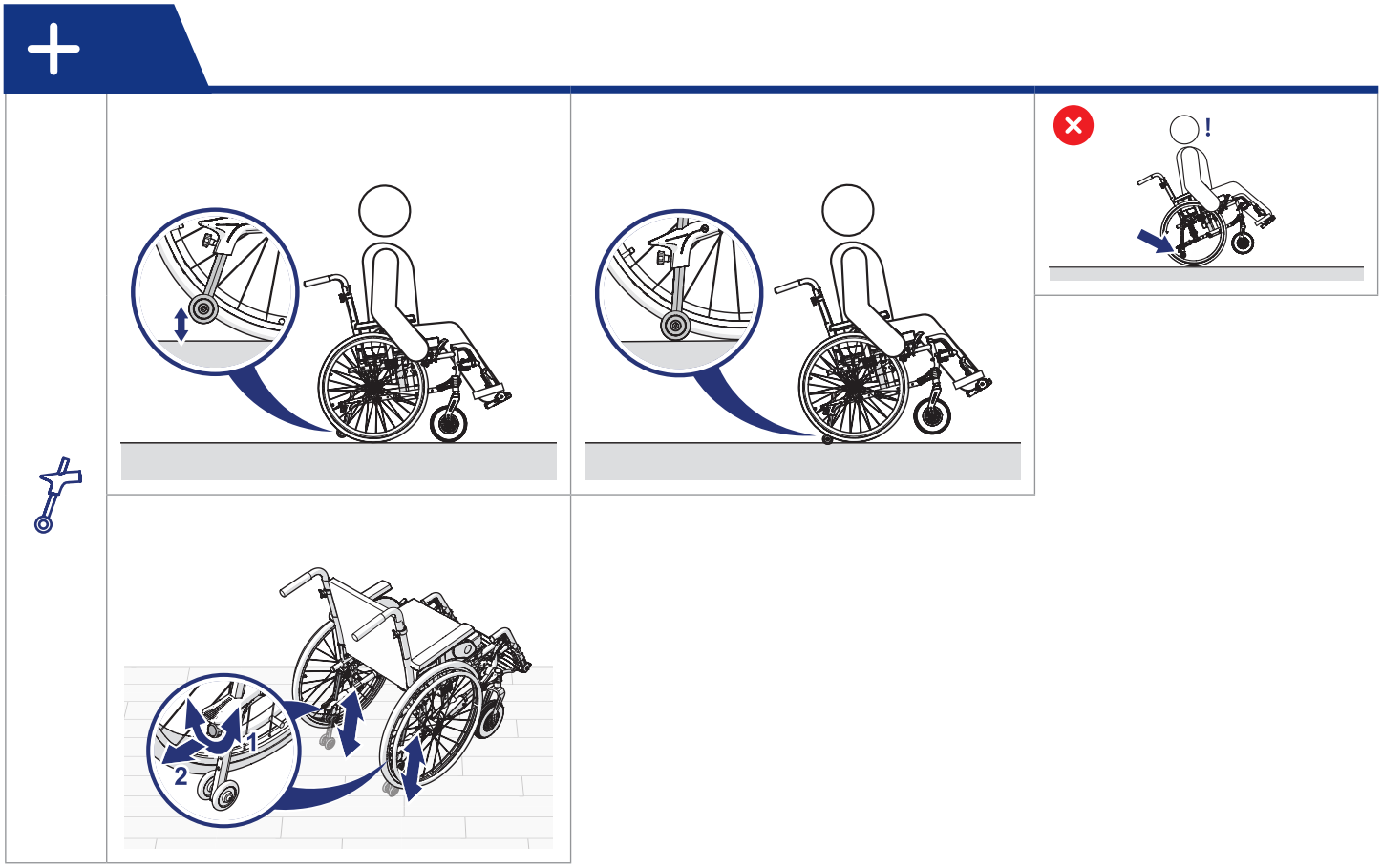

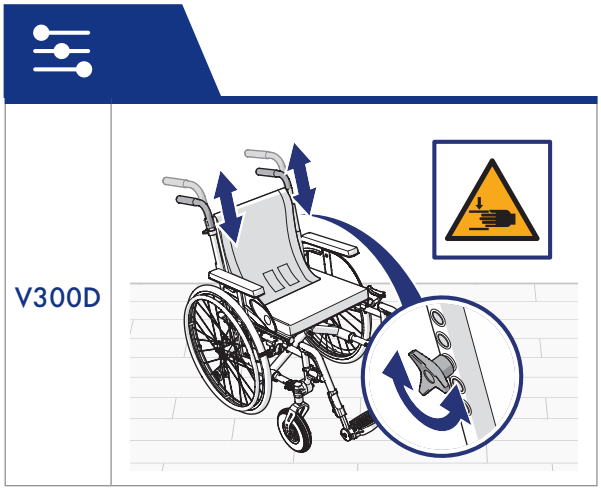

VERMEIREN
we care for you