V300 30°

Quick Start Guide

CE	TYPE V300 30°	MD	Rev. 2026-10

≤ 130 kg

SHOP

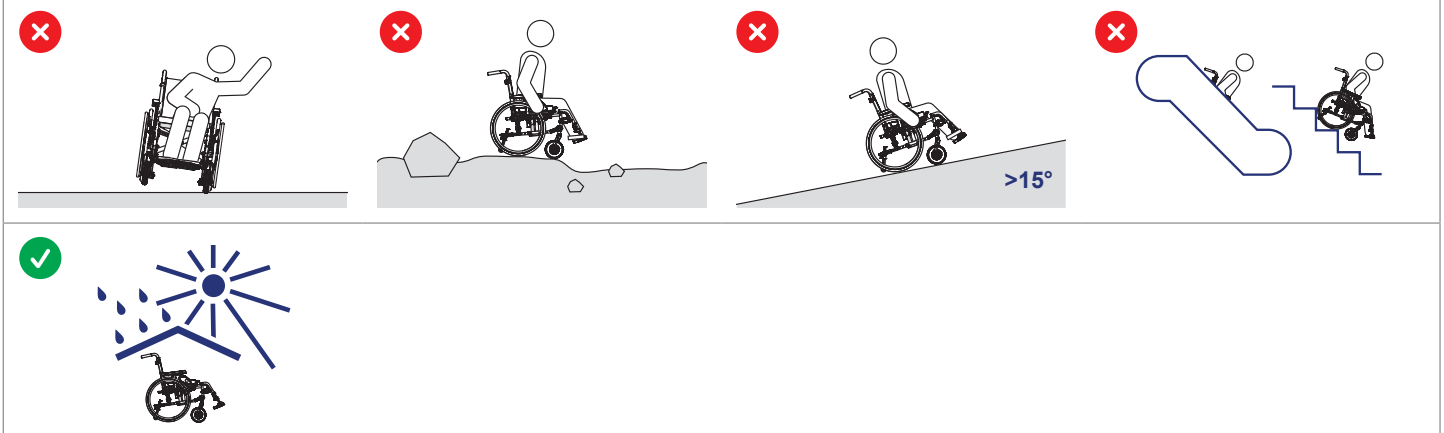

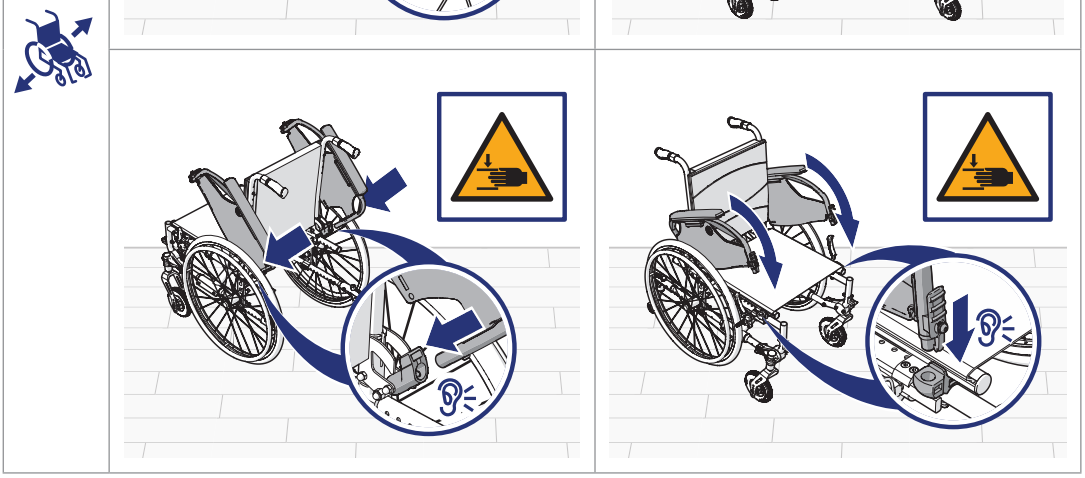

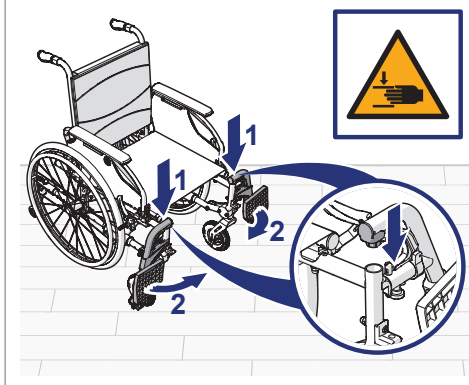
1
1
2
2

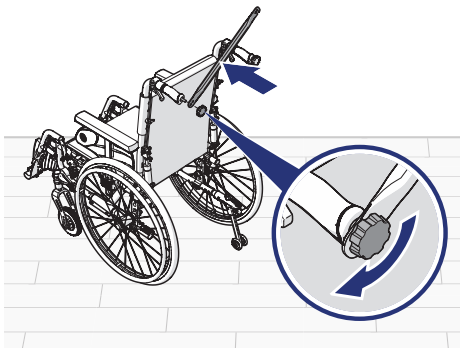

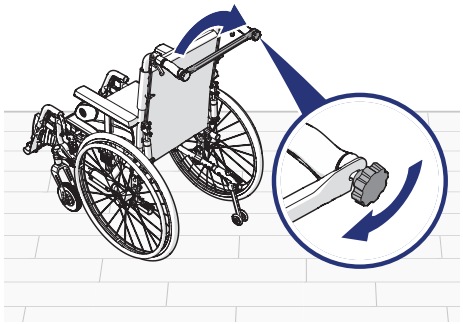

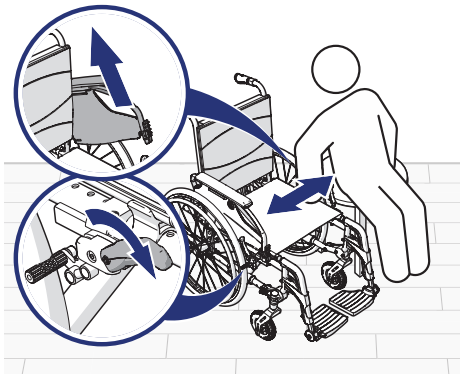

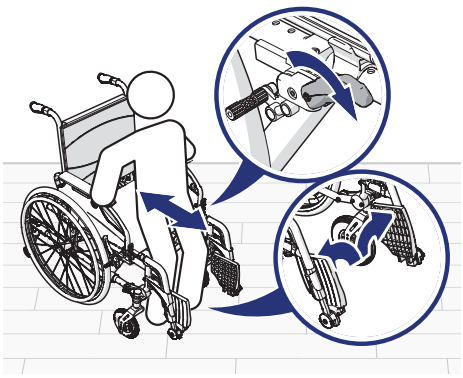



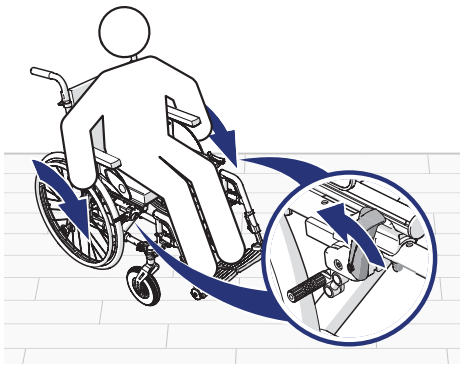

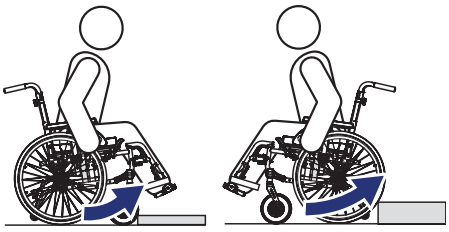

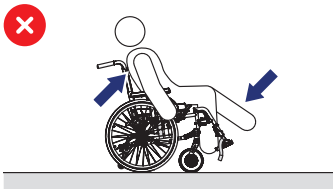

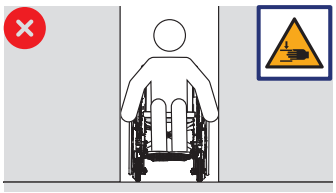

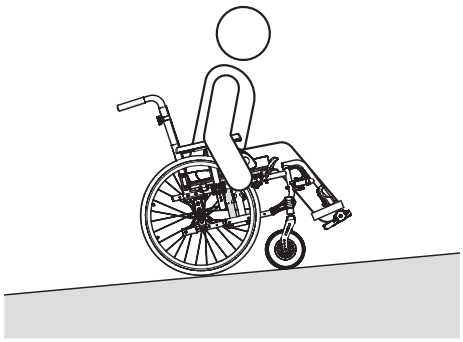



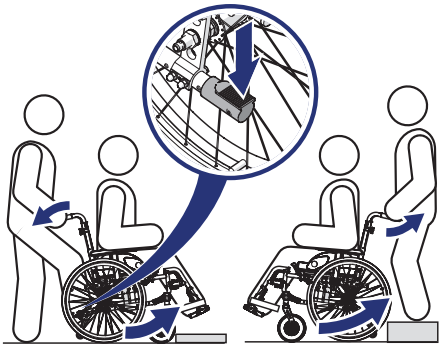

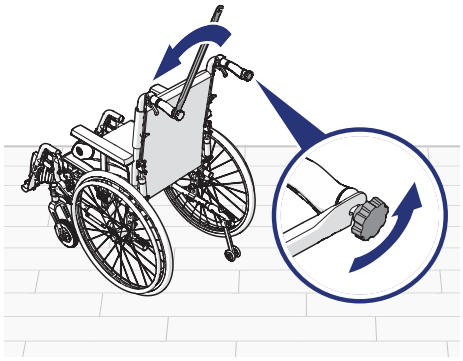

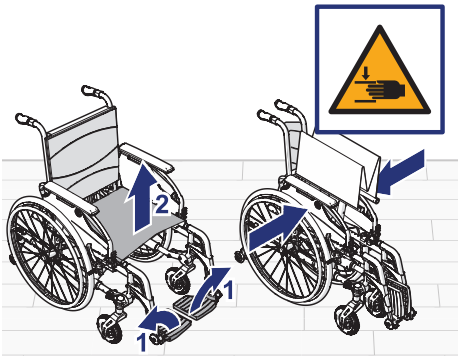
2
1
1

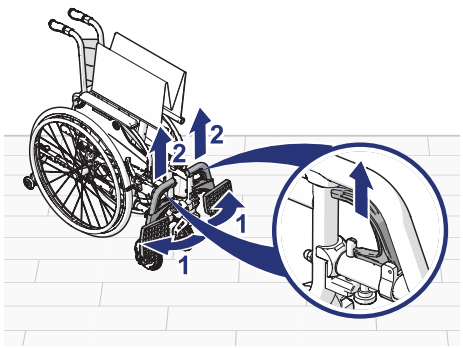
2
2
2
1
1

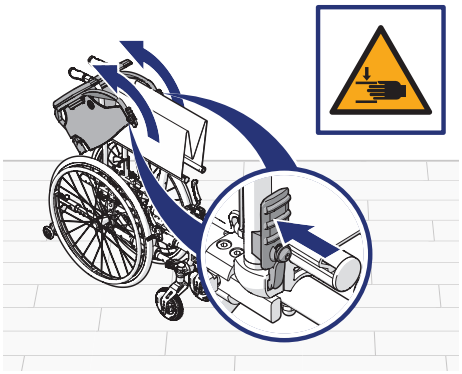

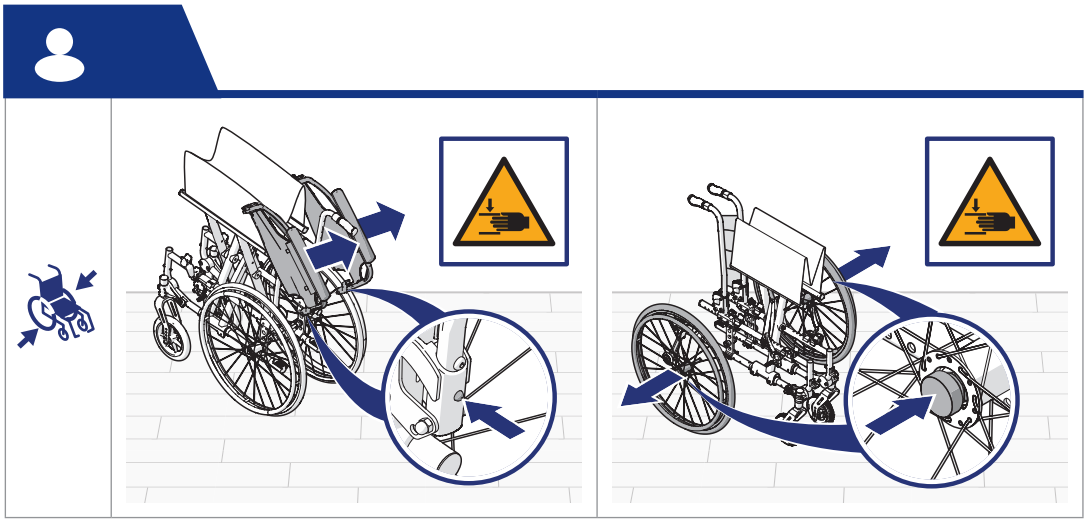



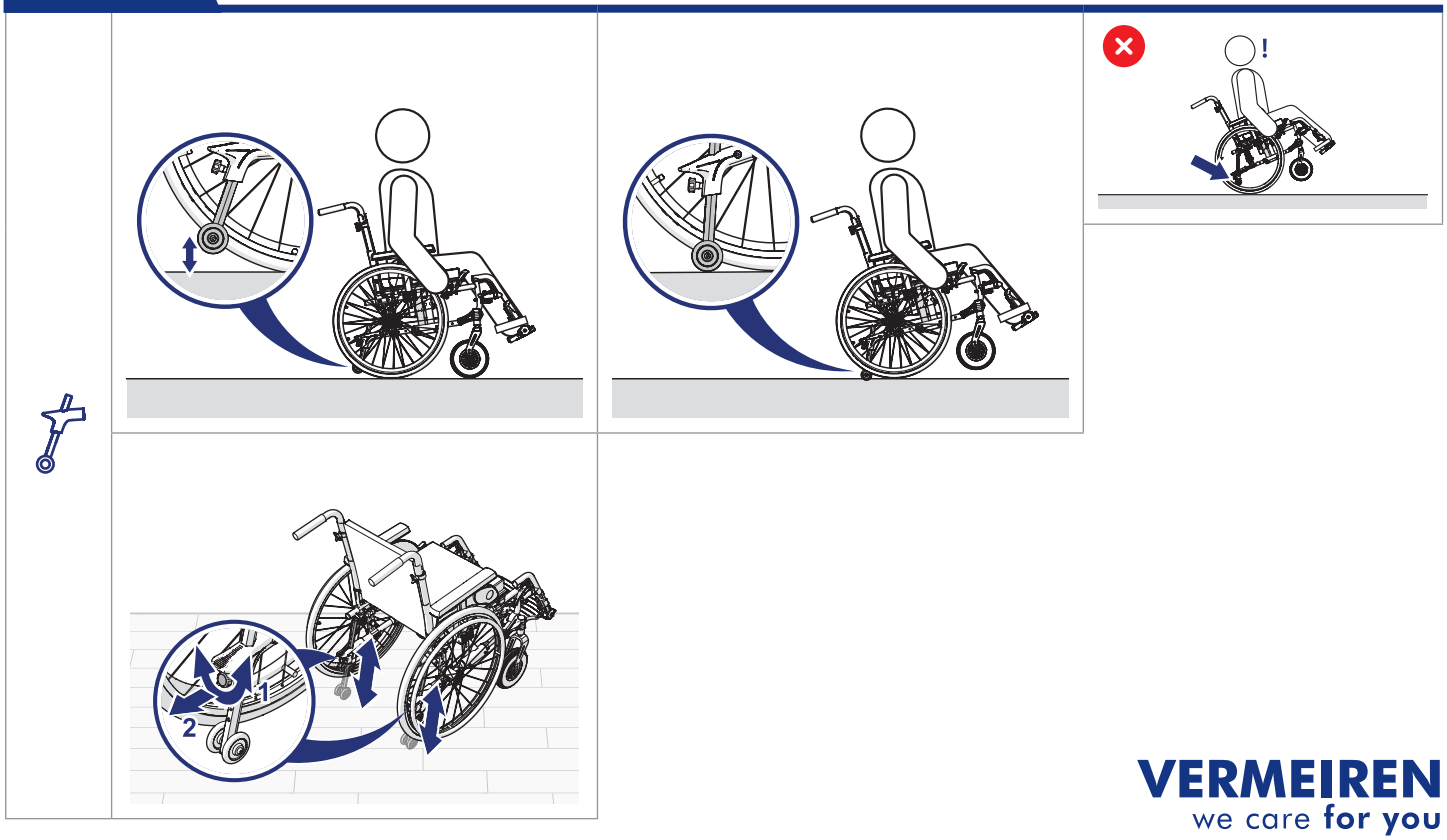

VERMEIREN
we care for you